Exploring Quantum Mechanics One Photon at a Time: A Quantum Eraser Experiment for Undergraduates

Dr. Maximilian Schlosshauer
University of Portland

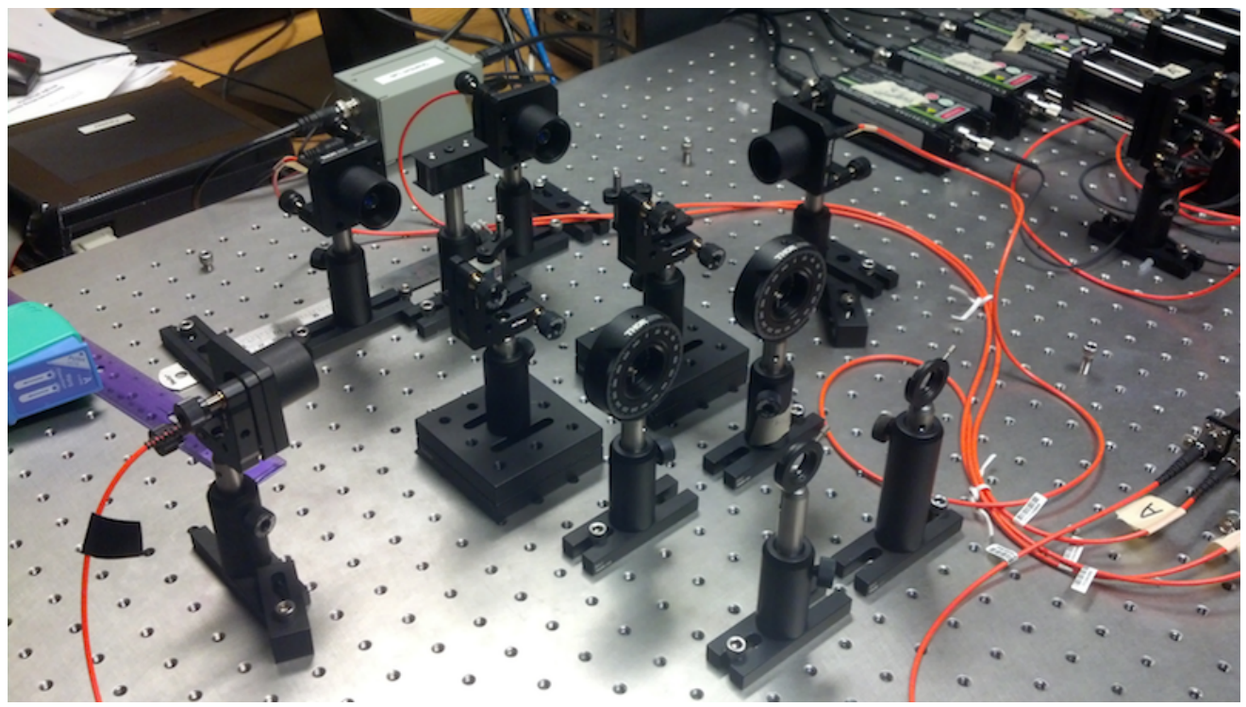

PNACP Meeting 2016

University of Portland

Motivation

- Quantum mechanics lecture courses rarely have a **lab component**
- Student labs on quantum mechanics often focus on the "**old quantum theory**," in particular, energy quantization (hydrogen spectrum, photoelectric effect, Franck-Hertz effect, etc.)

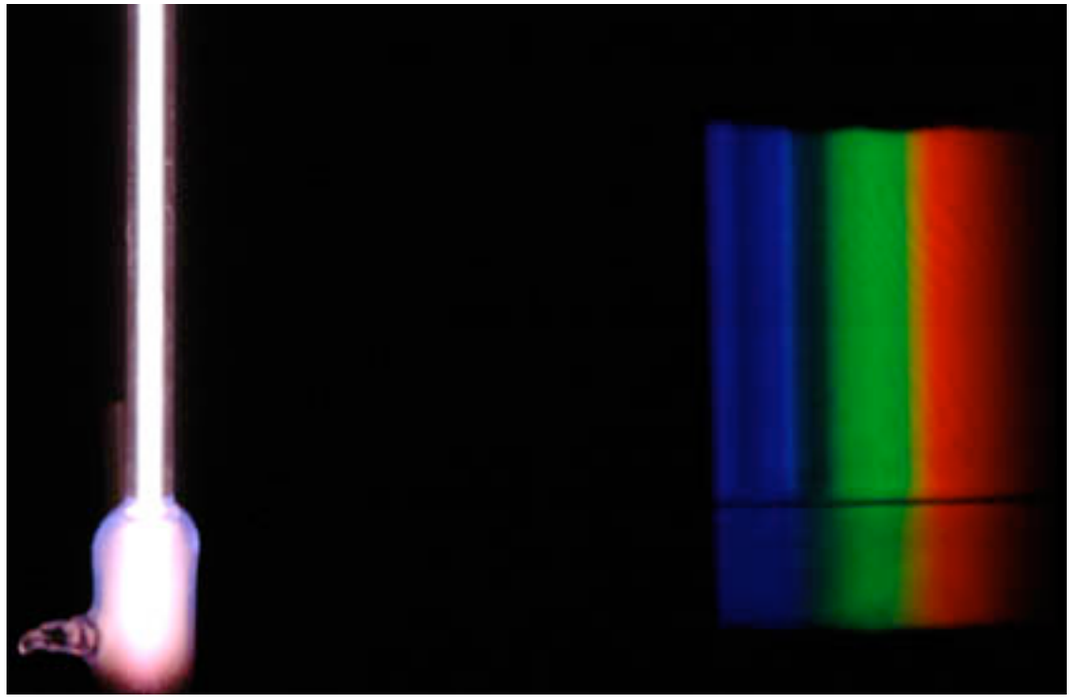

Motivation

- The **modern way** of thinking about quantum mechanics is underrepresented: qubits, quantum information, entanglement, Bell tests, quantum eraser, quantum tomography, quantum cryptography, weak measurement, etc.

- As a result, students often do not fully recognize the **essential features** of quantum mechanics

- Delayed-choice quantum eraser as an excellent **pedagogical tool**

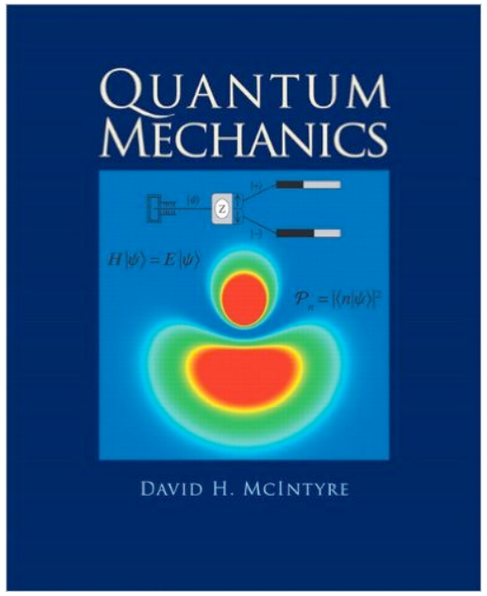

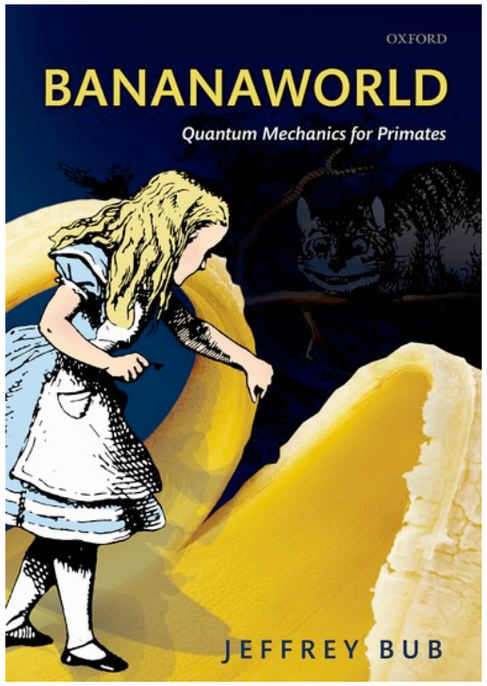

Motivation

- **Photons** make for handy and versatile two-state quantum systems (qubits)
- Experimental equipment is **affordable**
- Can be set up and operated by **undergraduates**
- **Modular structure** of the setup means it can be used for countless modern quantum experiments

  Examples: Single-photon interference, proof of photons, Bell test, quantum tomography, quantum cryptography, quantum random number generator, weak measurement, etc.
- Adds experimental component to **lecture courses** on quantum mechanics
- **Empowers** students and faculty alike

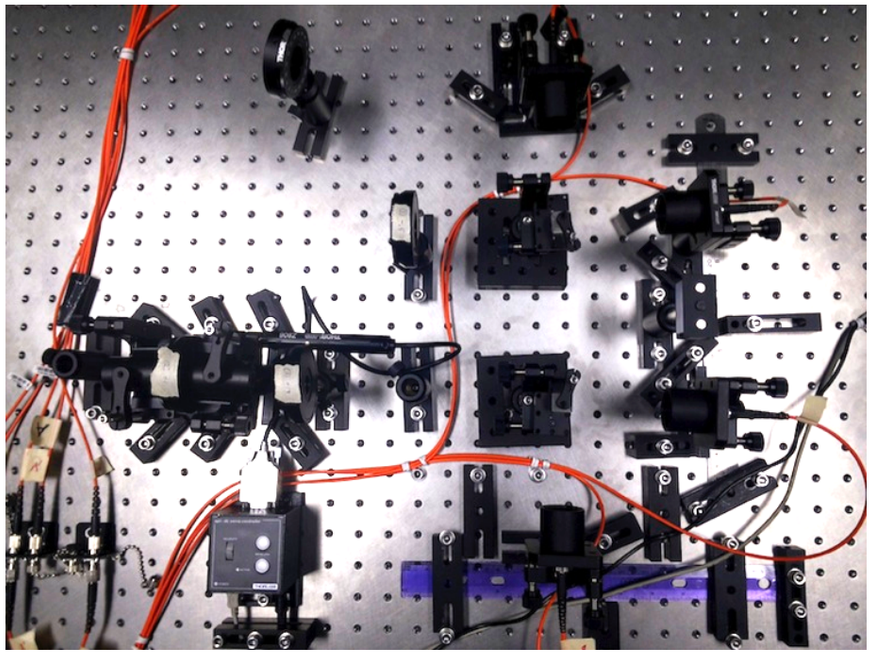

Delayed-choice interferometry

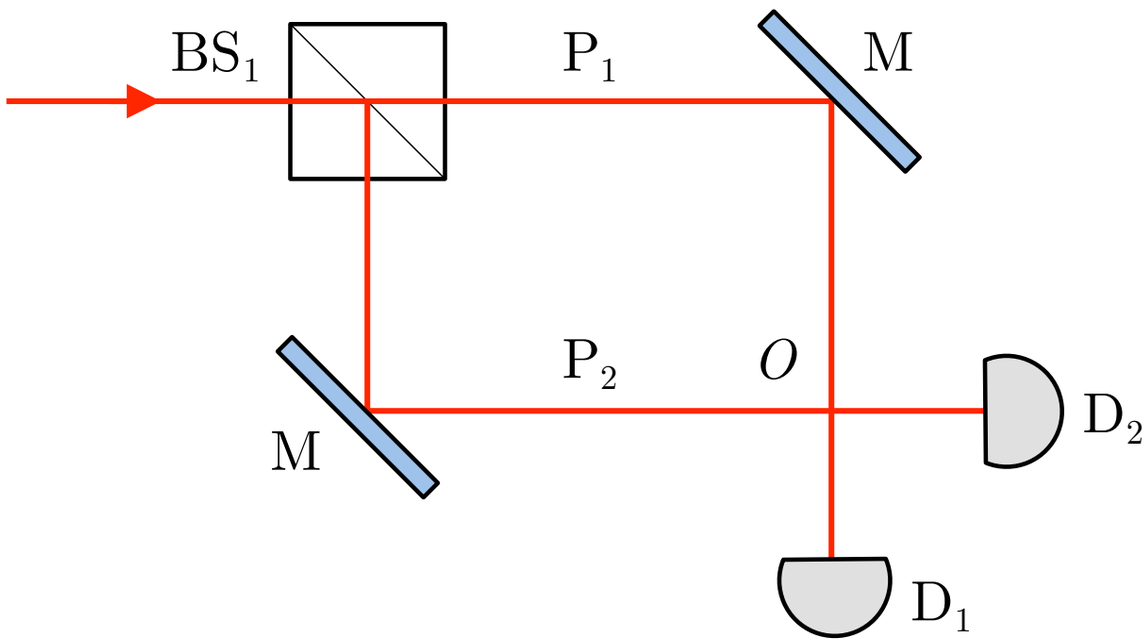

John Wheeler (1911–2008)

Delayed-choice interferometry

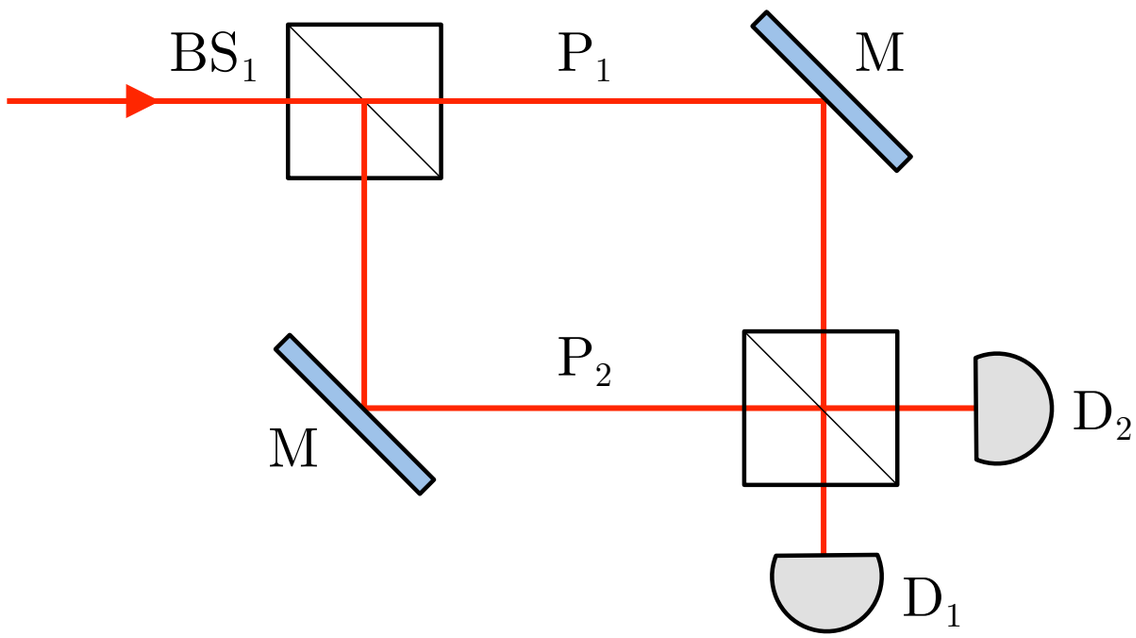

John Wheeler (1911–2008)

Delayed-choice interferometry

In Wheeler's words:

Thus one decides whether the photon "shall come by one route, or by both routes" after it has "*already done* its travel." ... We have a strange inversion of the normal order of time. We, now, by moving the mirror [in our example, the second beamsplitter] in or out have an unavoidable effect on what we have a right to say about the *already* past history of that photon.

John Wheeler (1911–2008)

Delayed-choice interferometry

In Wheeler's words:

Thus one decides whether the photon "shall come by one route, or by both routes" after it has "*already done* its travel." ... We have a strange inversion of the normal order of time. We, now, by moving the mirror [in our example, the second beamsplitter] in or out have an unavoidable effect on what we have a right to say about the *already* past history of that photon.

Niels Bohr's "solitary and pregnant sentence" (Wheeler):

It obviously can make no difference as regards observable effects obtainable by a definite experimental arrangement, whether our plans of constructing or handling the instruments are fixed beforehand or whether we prefer to postpone the completion of our planning until a later moment when the particle is already on its way from one instrument to another.

John Wheeler (1911–2008)

Quantum erasure

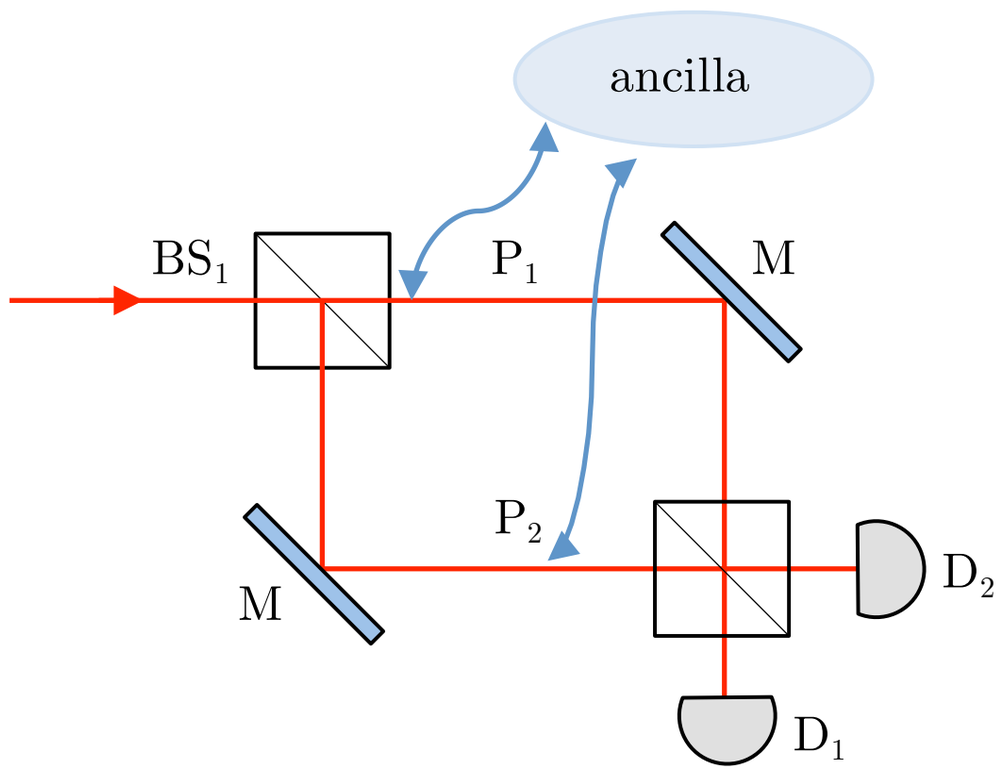

Ancilla encodes "which-way information" (making the two paths distinguishable, in principle).

This precludes observation of interference.

Consequence of quantum correlations (entanglement) with the ancilla.

$$|\Psi(x)\rangle = \frac{1}{\sqrt{2}}\left(\psi_1(x)|1\rangle + \mathrm{e}^{\mathrm{i}\Delta\phi}\psi_2(x)|2\rangle\right)$$

Quantum erasure

NOTE:
"Which-way information" is ***not*** information about a definite path of the photon!

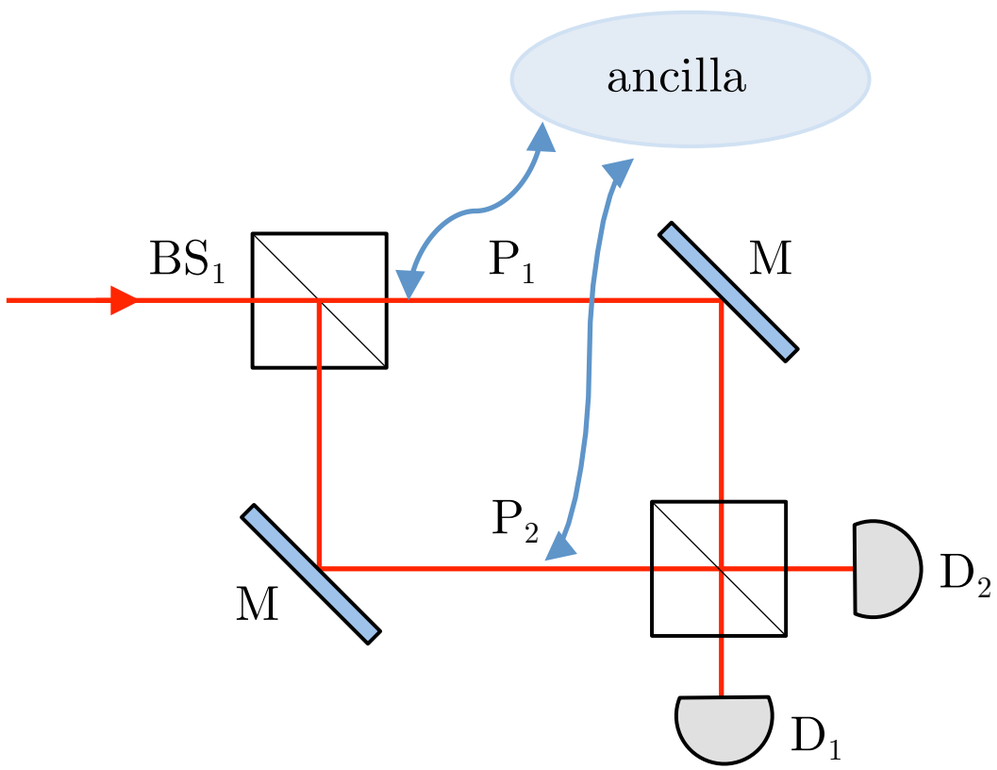

Ancilla encodes "which-way information" (making the two paths distinguishable, in principle).

This precludes observation of interference.

Consequence of quantum correlations (entanglement) with the ancilla.

$$|\Psi(x)\rangle = \frac{1}{\sqrt{2}}\left(\psi_1(x)|1\rangle + \mathrm{e}^{\mathrm{i}\Delta\phi}\psi_2(x)|2\rangle\right)$$

Quantum erasure

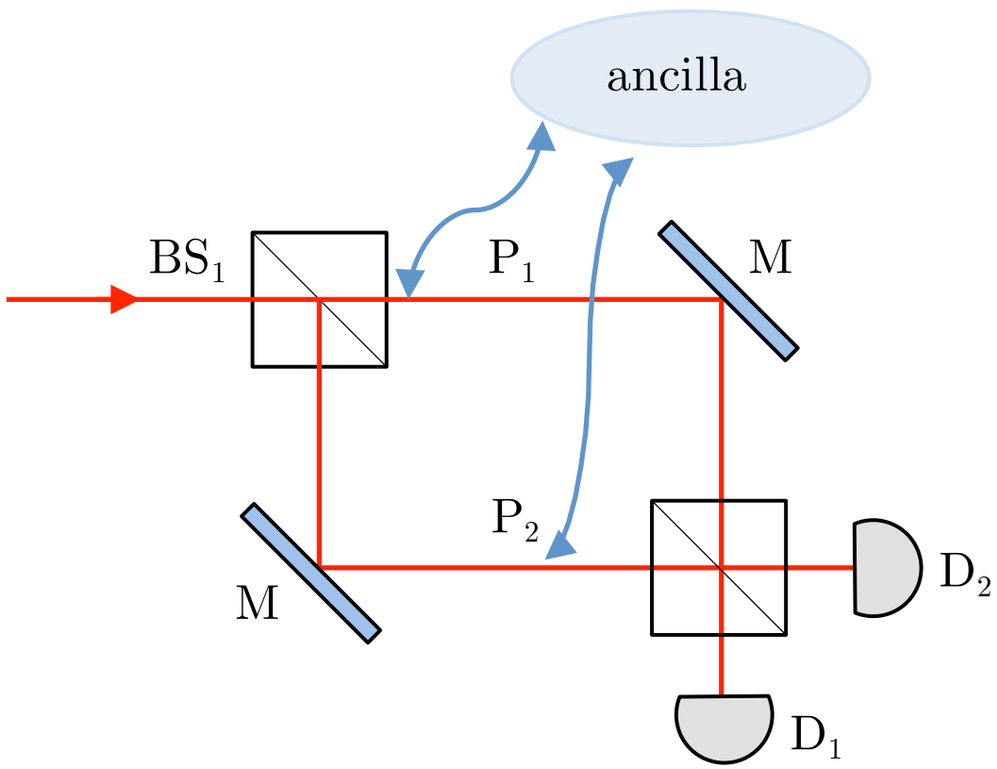

Measure ancilla to "erase" which-way information.

Provides additional information to decompose data into two out-of-phase interference patterns.

Erasure can be delayed until after photon has already been detected.

Quantum erasure using photons

Initial state:

$$|\psi\rangle = (|H\rangle + |V\rangle)\sqrt{2}$$

After passage through interferometer:

$$|\psi'\rangle = \frac{1}{\sqrt{2}}\left(|H\rangle + \mathrm{e}^{\mathrm{i}\Delta\phi}|V\rangle\right)$$

Measure in "diagonal" basis:

$$|\pm 45^\circ\rangle = (|H\rangle \pm |V\rangle)/\sqrt{2}$$

$$p(+45^\circ) = |\langle +45^\circ|\psi'\rangle|^2 = \cos^2\frac{\Delta\phi}{2},$$

$$p(-45^\circ) = |\langle -45^\circ|\psi'\rangle|^2 = \sin^2\frac{\Delta\phi}{2}.$$

Quantum erasure using photons

Initial state:

$$|\psi\rangle = (|H\rangle + |V\rangle)\sqrt{2}$$

After passage through interferometer:

$$|\psi'\rangle = \frac{1}{\sqrt{2}}\left(|H\rangle + \mathrm{e}^{\mathrm{i}\Delta\phi}|V\rangle\right)$$

Measure in "diagonal" basis:

$$|\pm 45^\circ\rangle = (|H\rangle \pm |V\rangle)/\sqrt{2}$$

$$p(+45^\circ) = |\langle +45^\circ|\psi'\rangle|^2 = \cos^2\frac{\Delta\phi}{2},$$

$$p(-45^\circ) = |\langle -45^\circ|\psi'\rangle|^2 = \sin^2\frac{\Delta\phi}{2}.$$

Initial state:

$$|\Psi\rangle = \frac{1}{\sqrt{2}}\left(|H\rangle|H\rangle + |V\rangle|V\rangle\right)$$

After passage through interferometer:

$$|\Psi'\rangle = \frac{1}{\sqrt{2}}\left(|H\rangle|H\rangle + \mathrm{e}^{\mathrm{i}\Delta\phi}|V\rangle|V\rangle\right)$$

$$p(+45^\circ, H) = \frac{1}{4}$$

$$p(+45^\circ, V) = \frac{1}{4}$$

$$p(+45^\circ, +45^\circ) = \frac{1}{2}\cos^2\frac{\Delta\phi}{2}$$

$$p(+45^\circ, -45^\circ) = \frac{1}{2}\sin^2\frac{\Delta\phi}{2}$$

The experiment

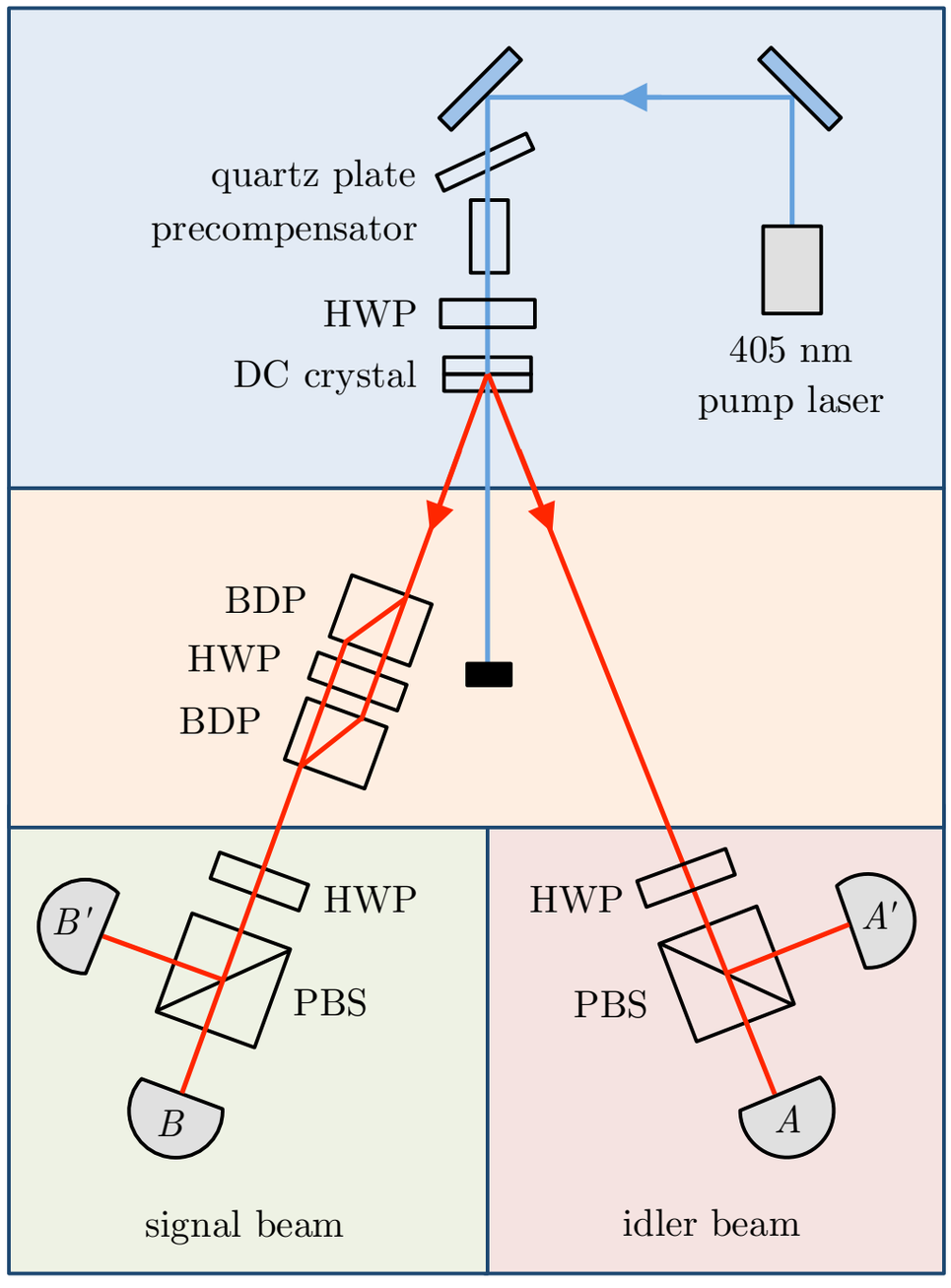

Photon production:
Polarization-entangled photon pairs (810 nm) from spontaneous parametric downconversion
Heralded single photons using coincidence counting

Interferometer:
Calcite beam-displacing prisms

Detectors:
Single-photon counting modules based on avalanche photodiodes (educational model through ALPhA)

Readout:
Field-programmable gate array, LabView

Shopping list:
http://people.whitman.edu/~beckmk/QM/

TOTAL: $25,000–$30,000

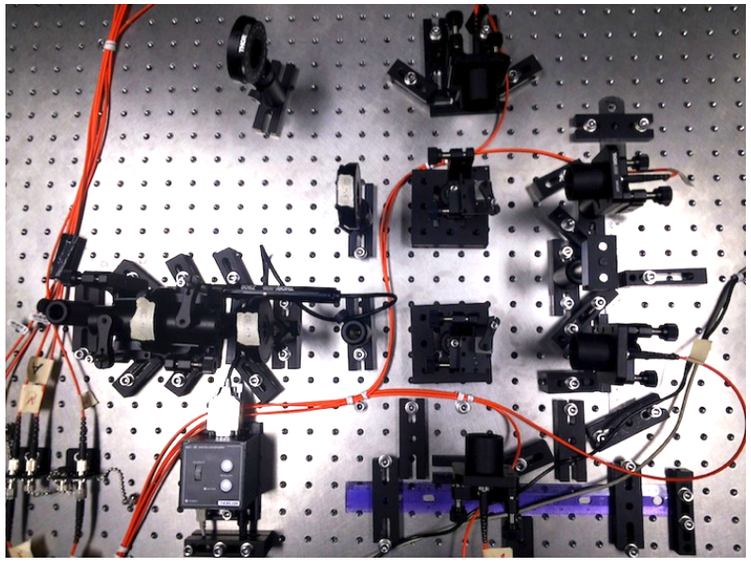

Results (without delayed choice)

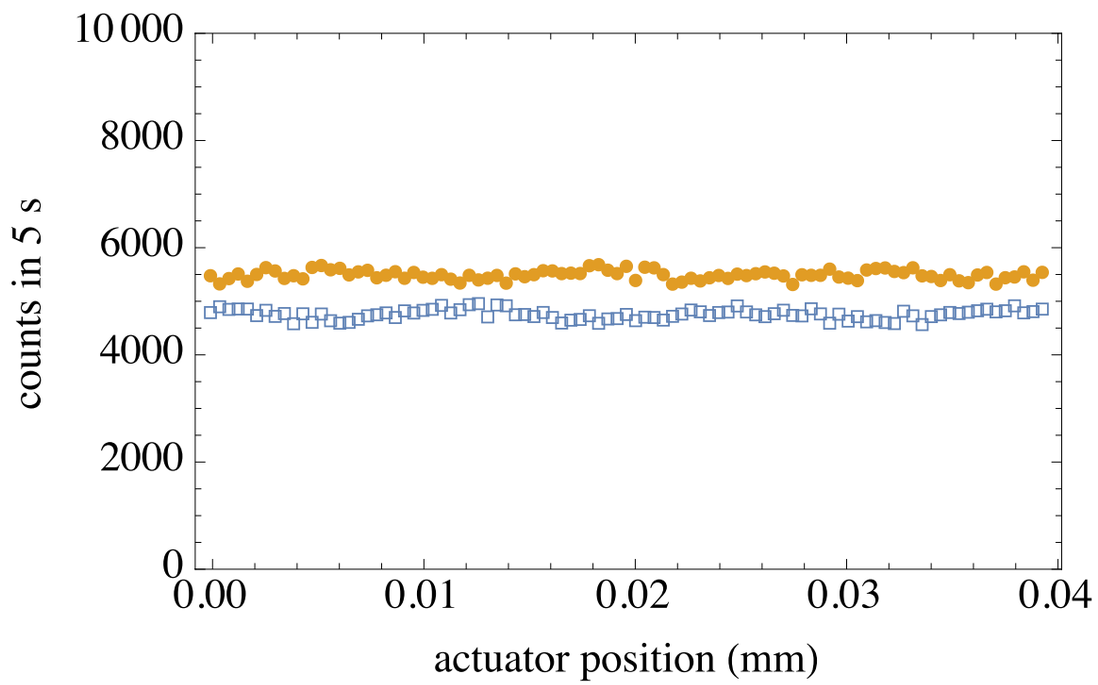

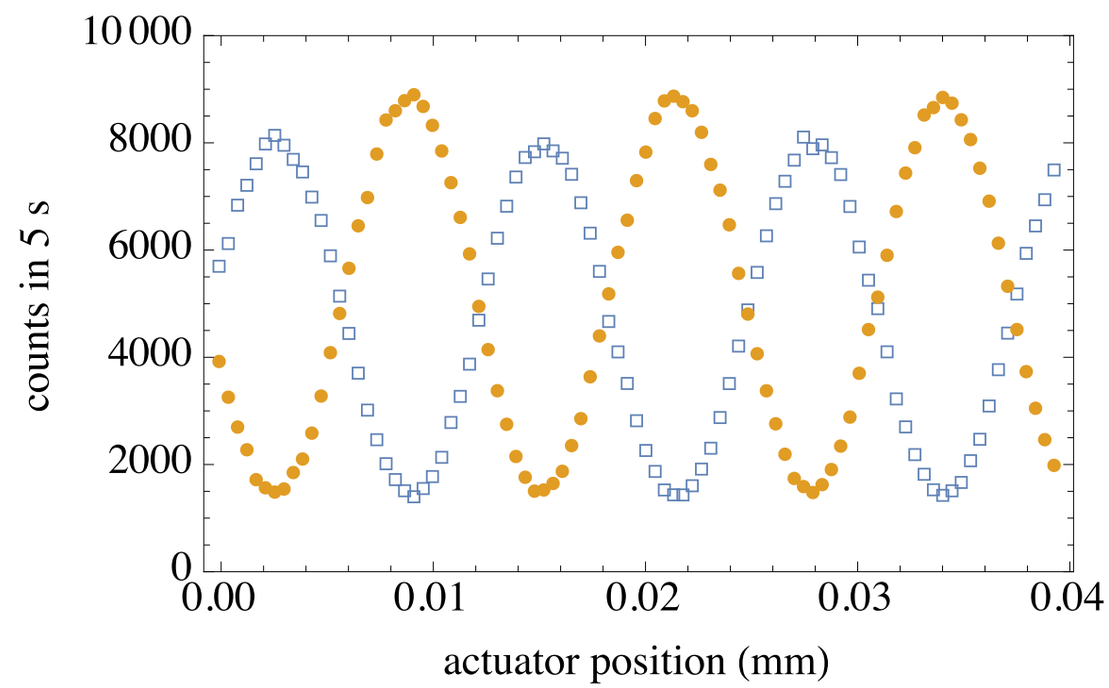

Free-space delay

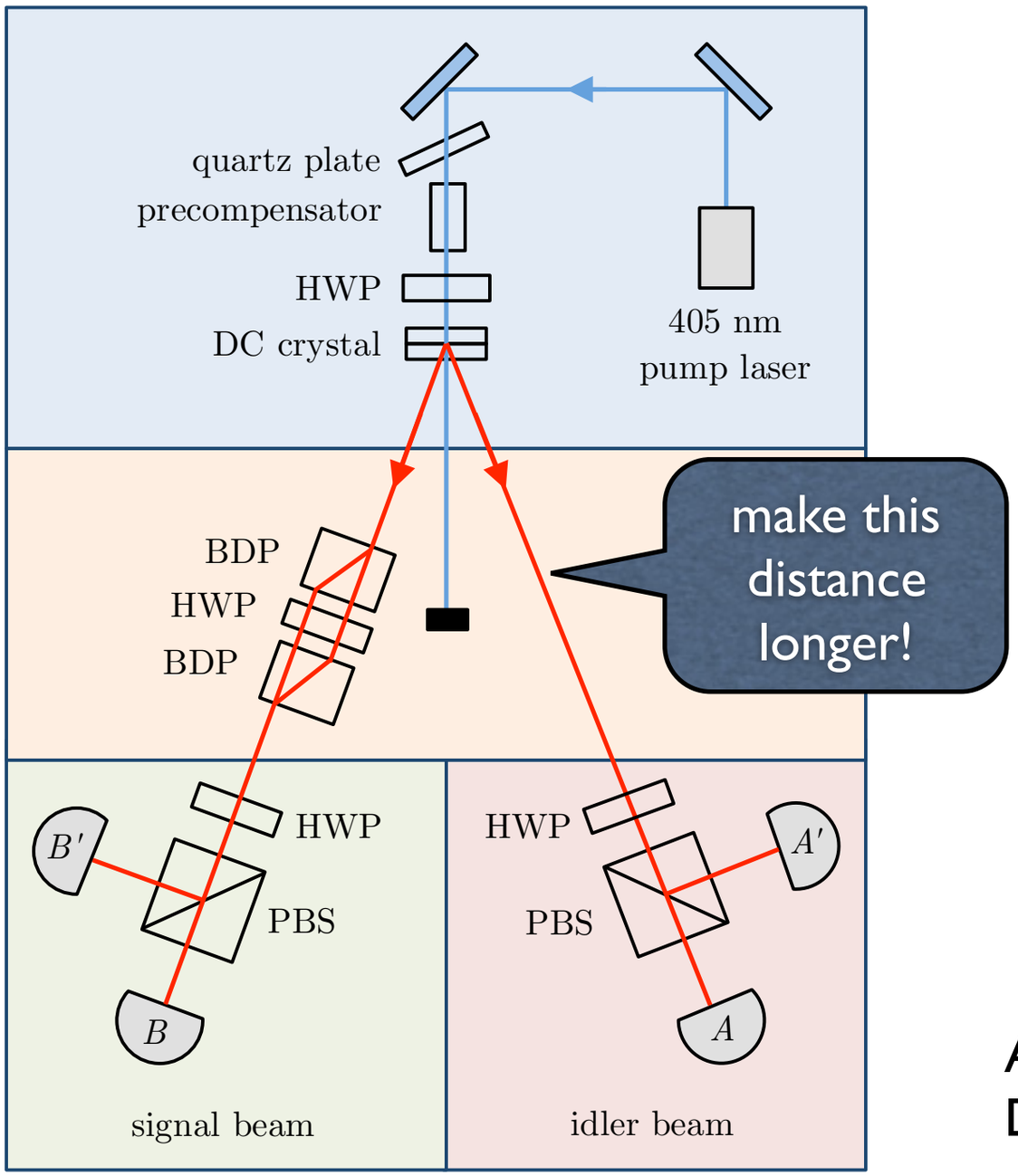

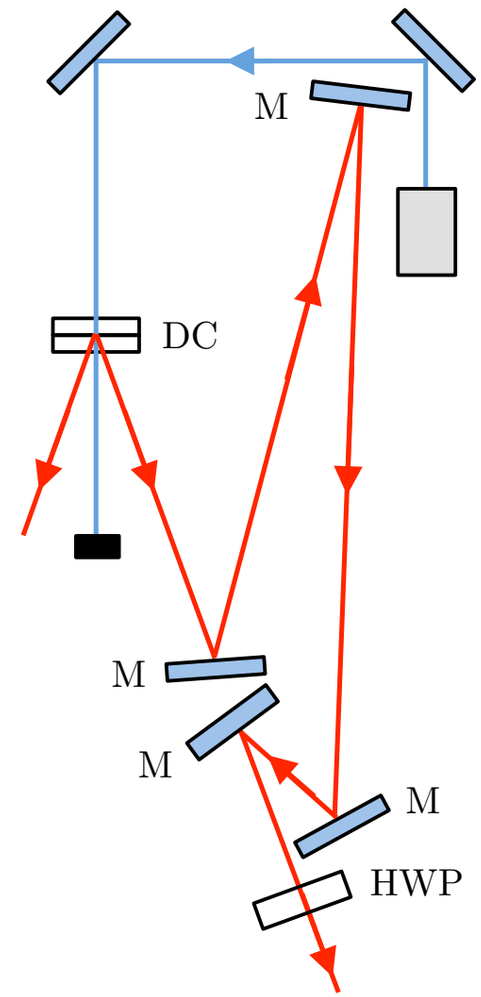

Additional distance: 2.0 meters
Delay time: 6.7 ns

Results (with free-space delay)

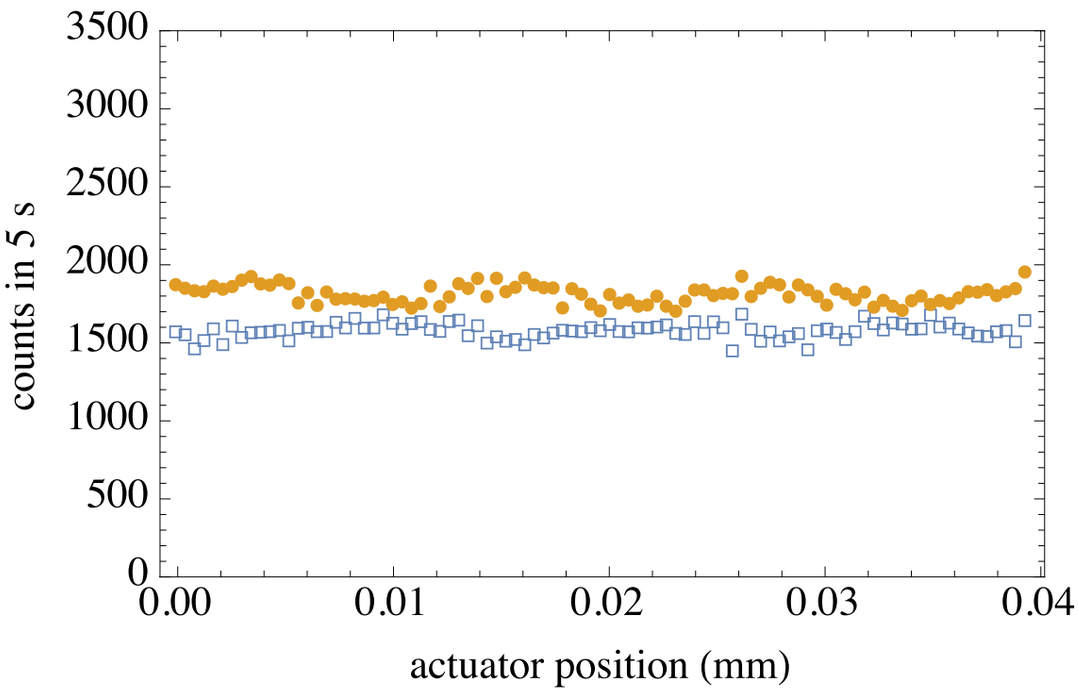

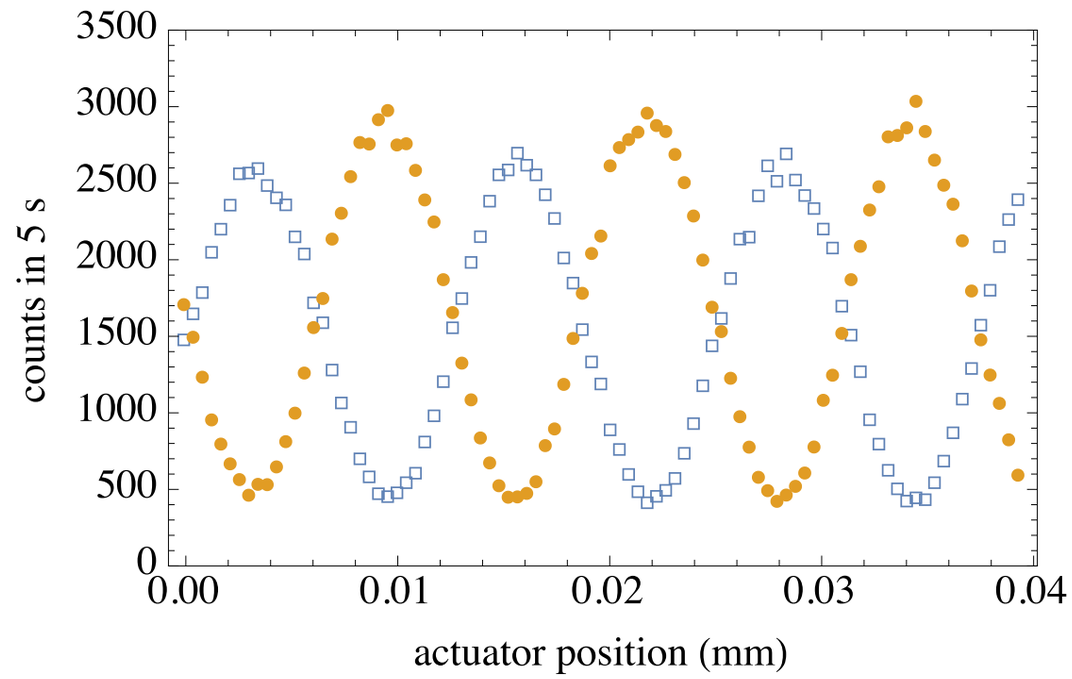

Cable delay

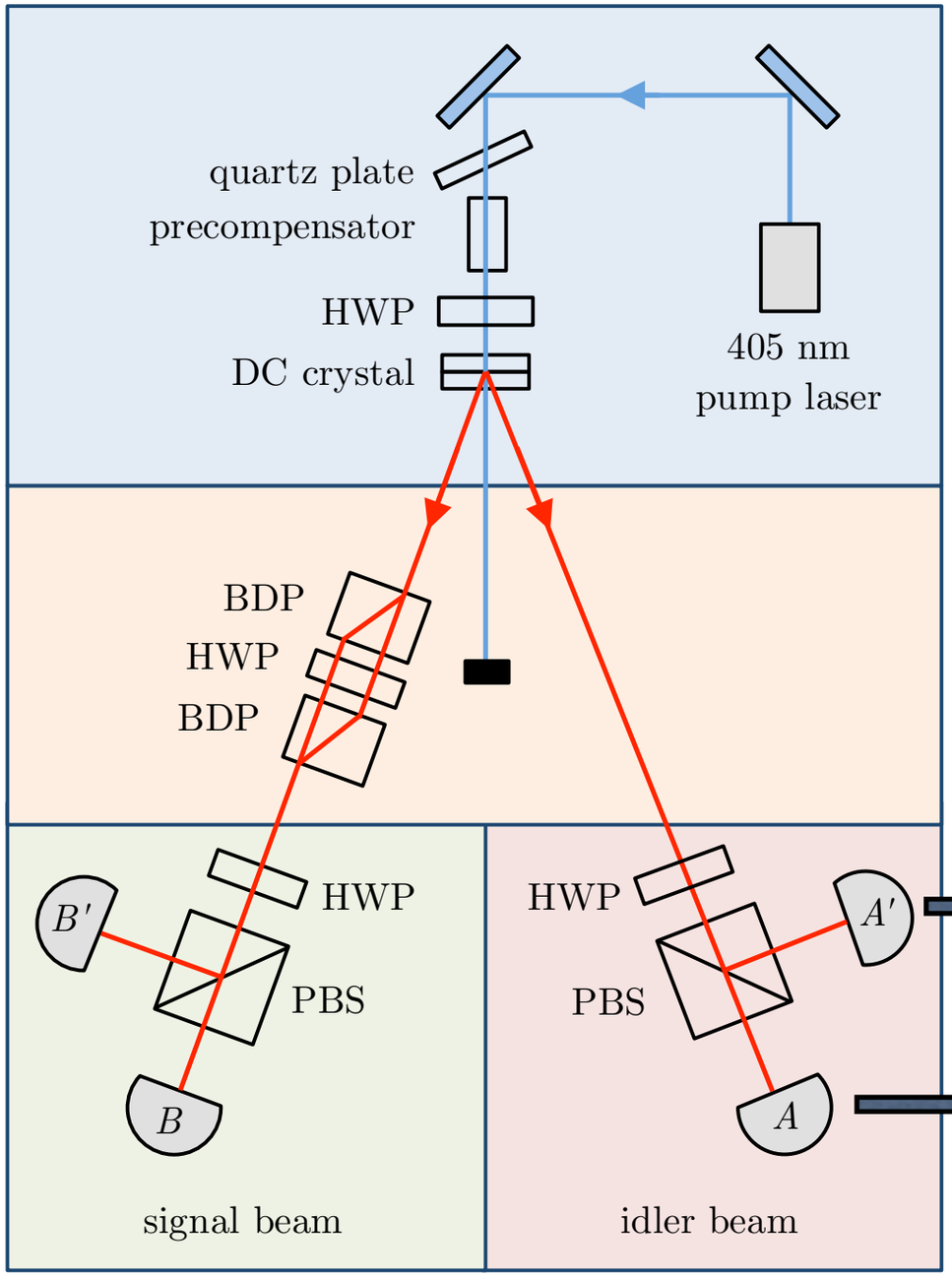

elongate fiber-optic cable to detectors

Additional distance: 4.0 meters
Delay time: ~20 ns

Results (with cable delay)

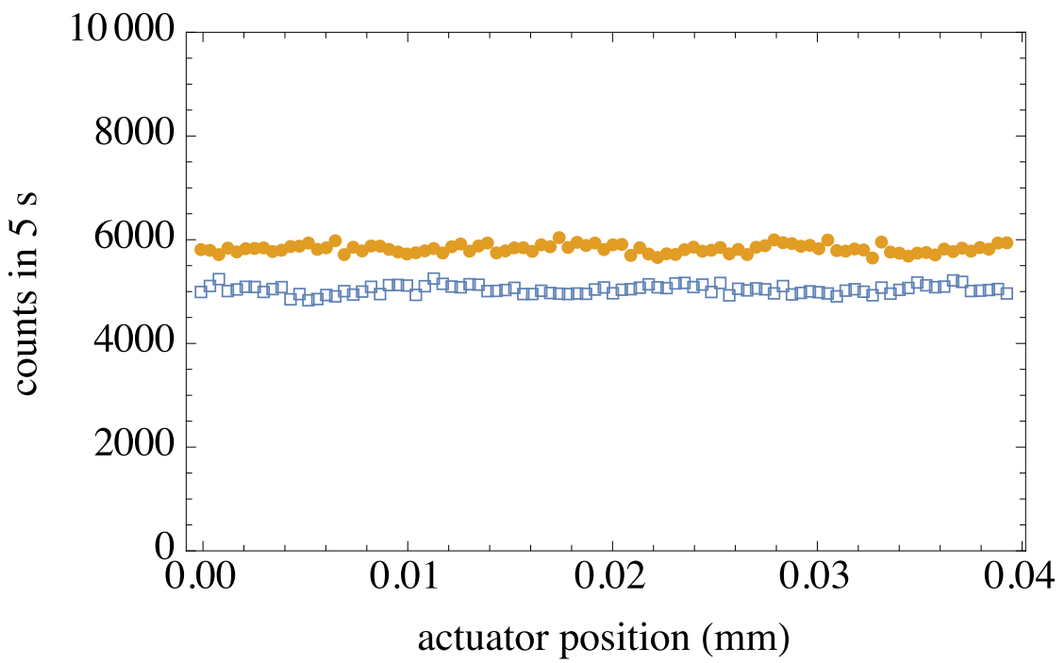

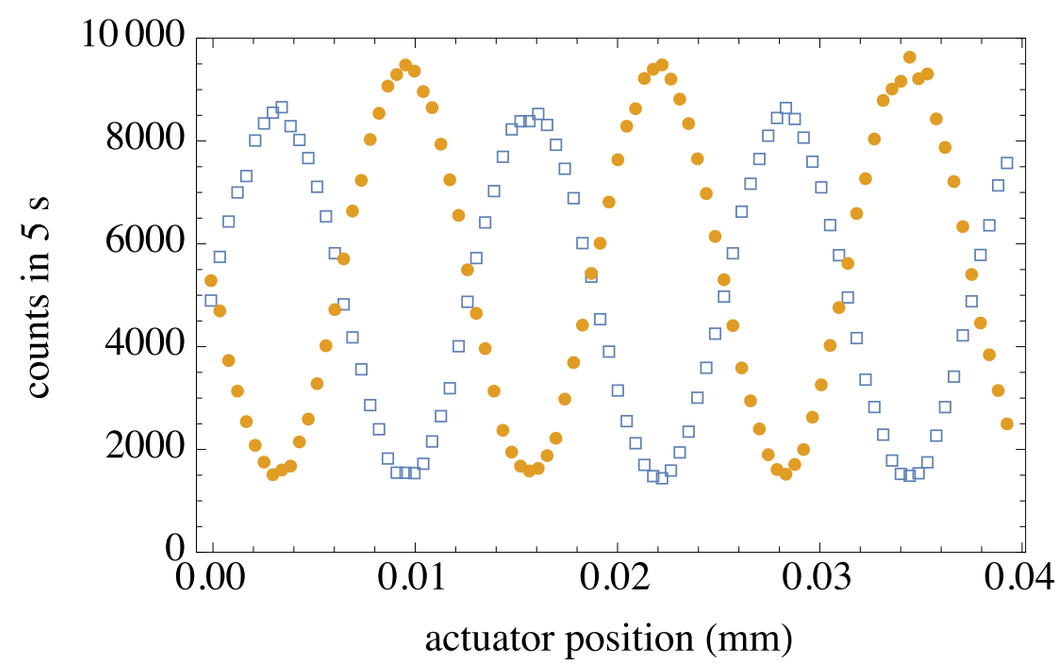

Not one of the seven delayed choice experiments [presented in the paper] has yet been done. There can hardly be one that the student of physics would not like to see done.

J. A. Wheeler, "The `past' and the `delayed-choice' double-slit experiment," in *Mathematical Foundations of Quantum Theory*, edited by A. R. Marlow (Academic Press, New York, 1978), pp. 9–48.

Concluding remarks:
How to interpret delayed-choice quantum erasure
(and how not to)

- Measurement of **signal photon alone** never shows interference. Statistics are independent of whatever we do to the idler photon.

- The **temporal order** of measurements on different systems (or degrees of freedom) is **irrelevant** to the resulting statistics, even if the systems are entangled.

- Thus, quantum erasure **does not require** any "spooky action at a distance" (Einstein) or "inversion of the normal order of time" (Wheeler).

- Erasure corresponds to a **"sorting"** (or "tagging") of the data from the interferometer using the **additional information** gained from the erasure measurement.

Acknowledgments

University of Portland

- UP research students:
  James Ashby, Peter Schwarz

- Equipment advice & helpful discussions:
  Mark Beck (Whitman College)
  Richard Haskell, Theresa Lynn (Harvey Mudd)
  Gabe Spalding (Advanced Laboratory Physics Association)
  Shannon Mayer (Univ. of Portland)

- Funding:
  Department of Physics, Univ. of Portland
  Student Summer Science Scholar program of the University of Portland
  Foundational Questions Institute

- Journal reference:
  J. M. Ashby, P. D. Schwarz, and M. Schlosshauer, "Delayed-choice quantum eraser for the undergraduate laboratory," *Am. J. Phys.* **84**, 95 (2016)